Heavy-duty Cantilever Racking HCR30

- ▲ Excellent low-cost storage system.
- ▲ Store long products with ease.
- ▲ Arms adjust easily on 100mm centers.
- ▲ "Pin keeper" device prevent arms from being dislodged during loading and unloading.
- ▲ Easy assembly, no special tools required.

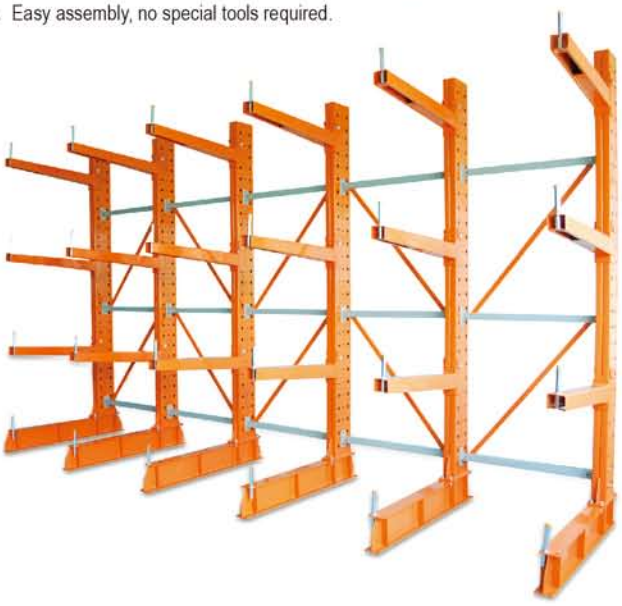

Arm fixing pin

Pin keeper

Safety pin

i-Lift No.		2512401			
Model		HCR30			
Capacity	(T)	30			
L	(mm)	L2+140			
L1	(mm)	600	1200	1800	2000
L2	(mm)	1000	1200	1500	2000

***Customized Size Acceptable.

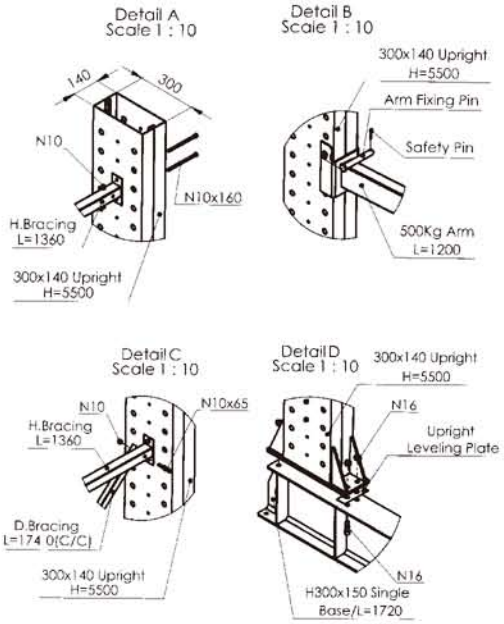

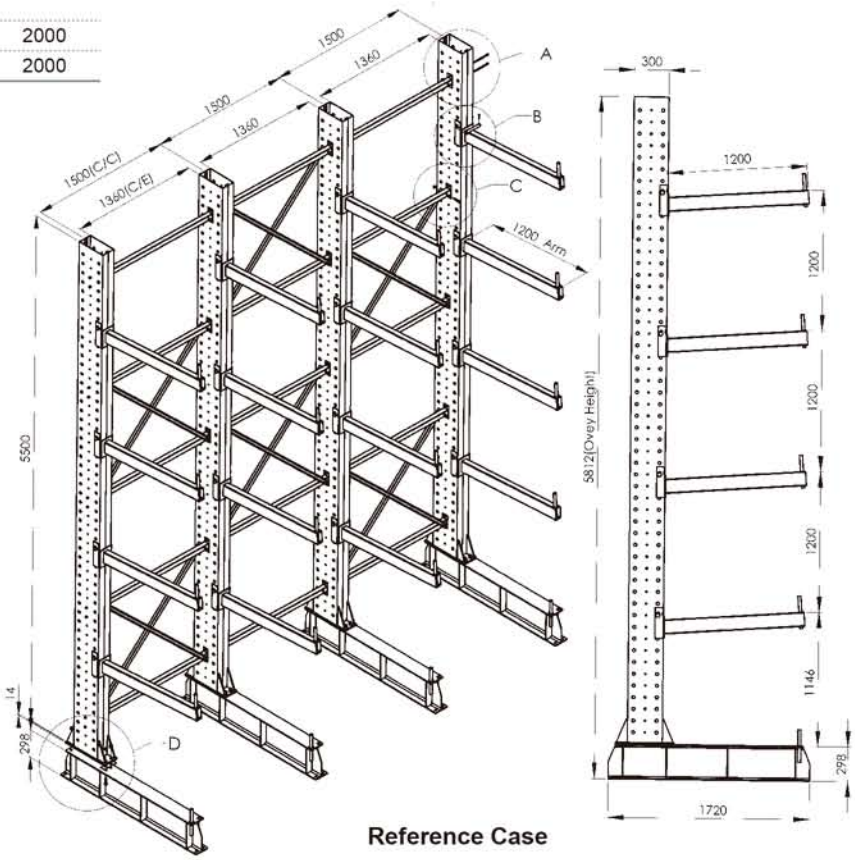

Reference Case